domix M8

PINOUT

Domotic Module for smart home & co

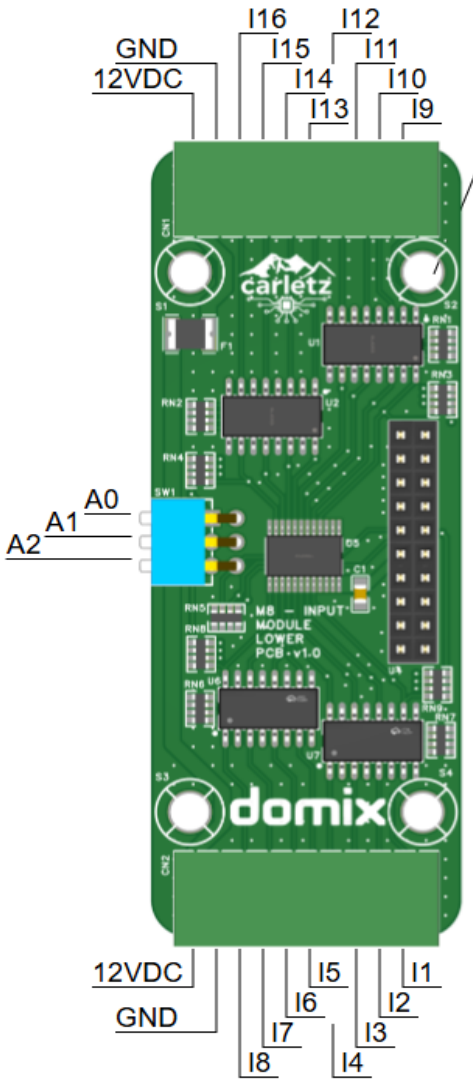

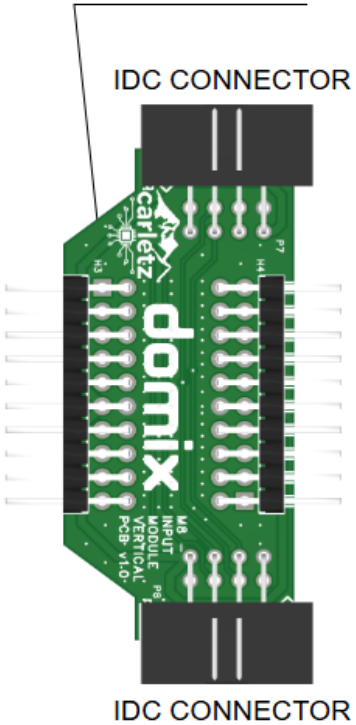

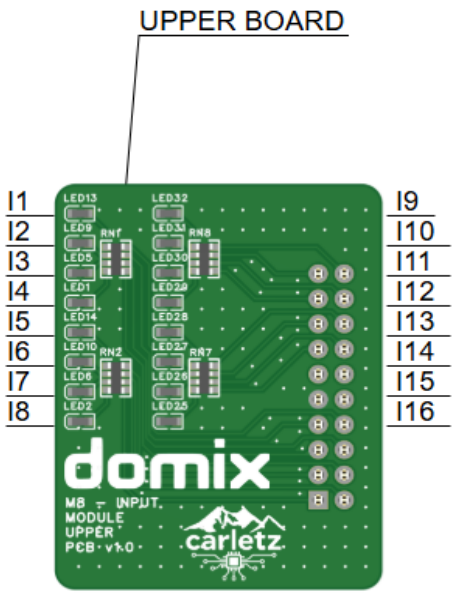

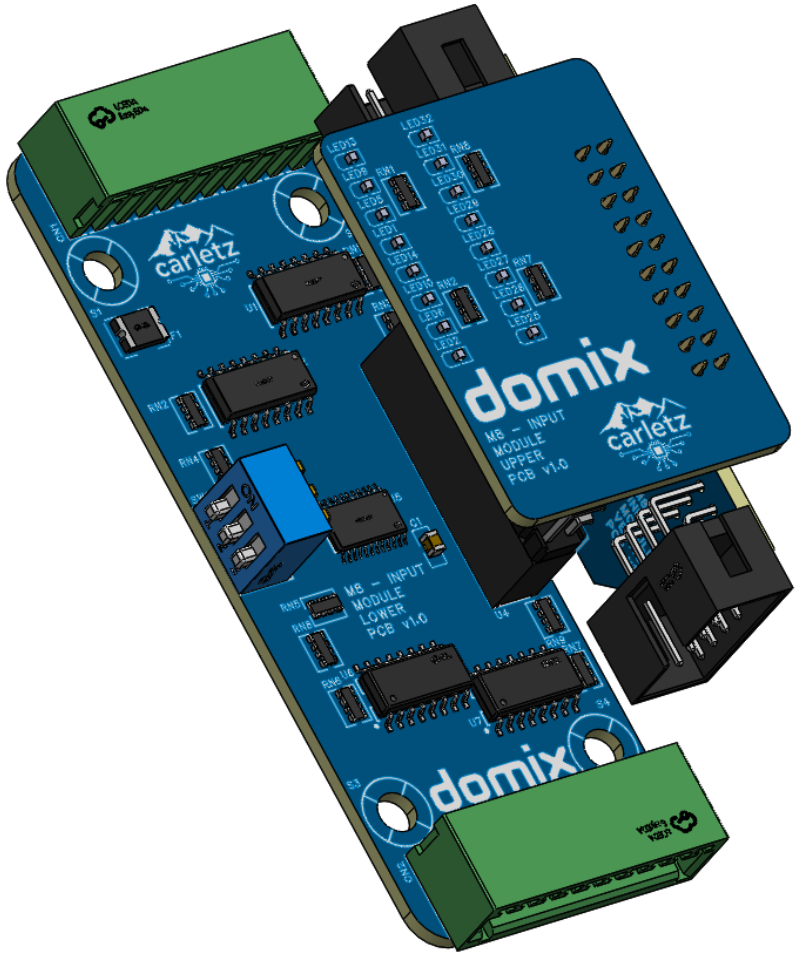

carletz	DOMIX - Domotic module for smart home & co		Create at	2026-02-03	Drawn	carletz
			Update at	2026-02-08	Reviewed	carletz
	Version	Size	Page 1 Total 2	Schematic	M8 - I/O Module		
	1	A4	EasyEDA	Board	M8 - INPUT	Page	Description

I/O Logic

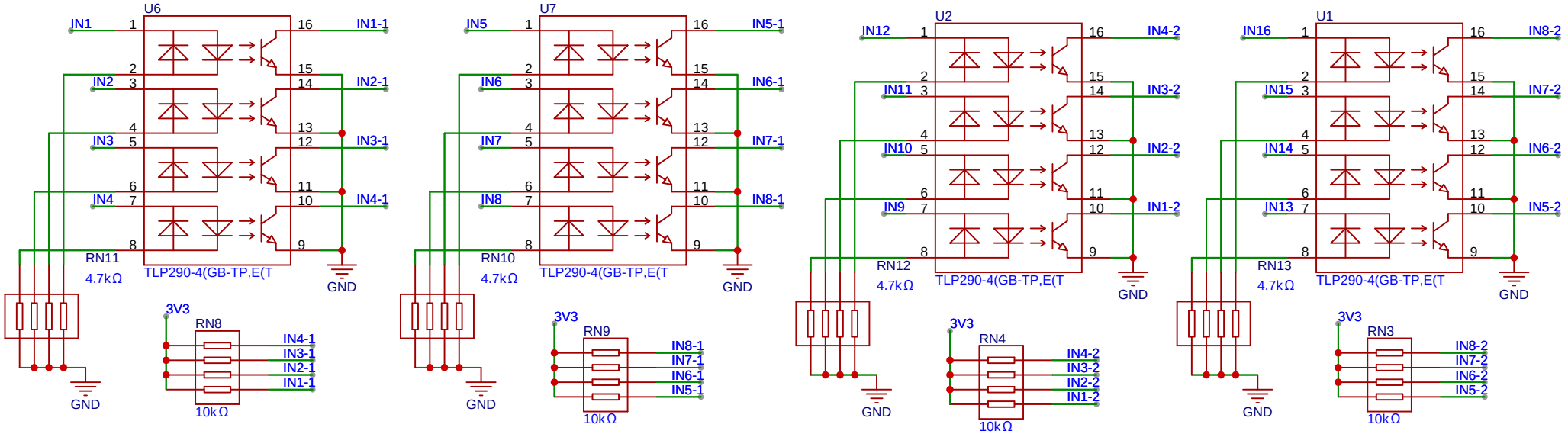

I2C Controller

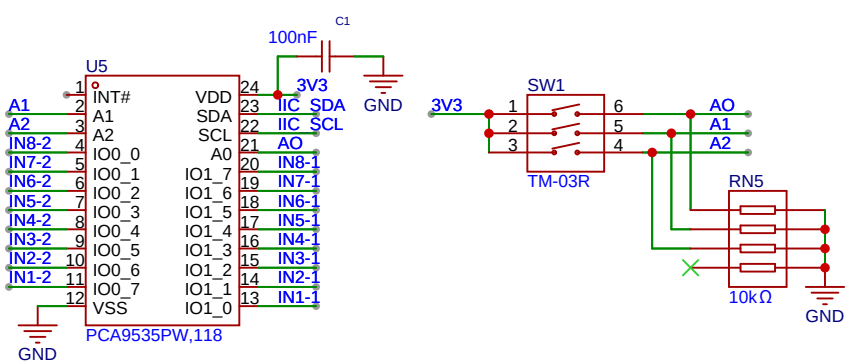

Connector & Miscellanea

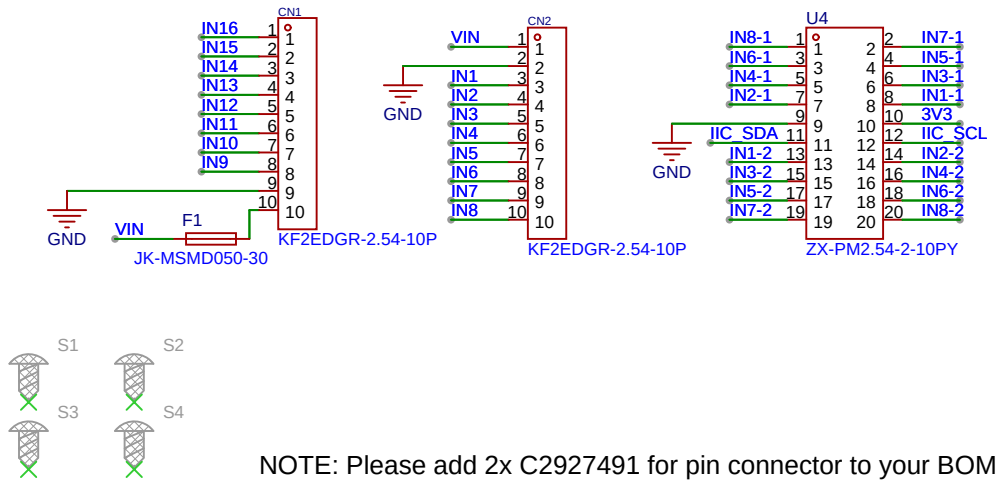

NOTE: Please add 2x C2927491 for pin connector to your BOM

DOMIX - Domotic module for smart home & co			Create at	2026-02-03	Drawn carletz
			Update at	2026-02-09	Reviewed carletz
Version	Size	Page 2 Total 2	Schematic	M8 - I/O Module	
1	A4	EasyEDA	Board	M8 - INPUT	Page Input